SVB.-148 2/14/74

WIRE DIAG. FOR ME-125 WITH 1/2 WAVE ELECT. SYSTEM (STD. SYSTEM)

INDIAN M/C CO
1535 W. ROSECRANS
GARDENA, CALIF
90249

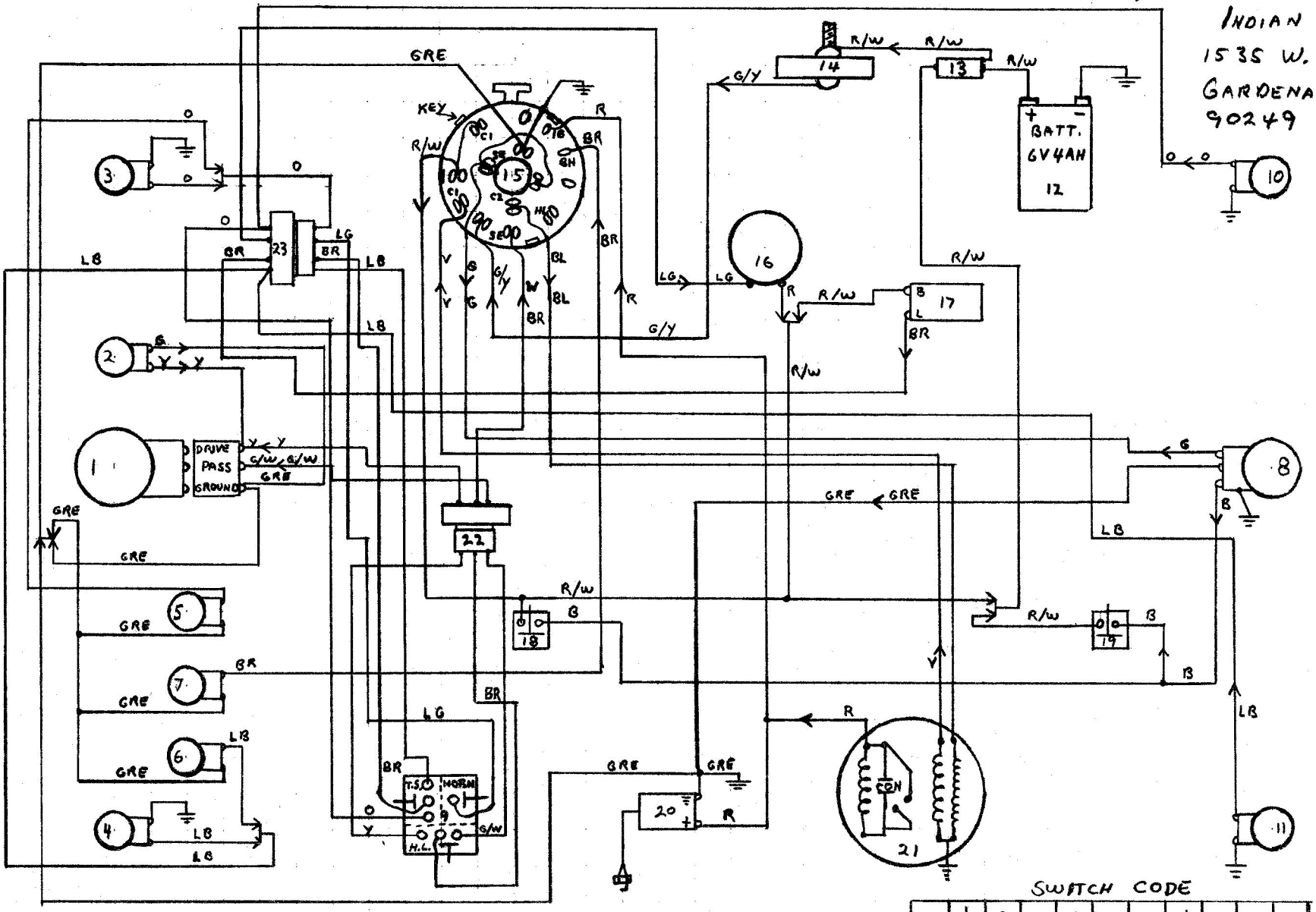

1	HEADLIGHT	10	R.R. TURN SIG. LIGHT	19	R. BRAKE LIGHT SWITCH	BR	BROWN	O	ORANGE
2	HIGH BEAM IND. LIGHT	11	L.R. " " "	20	HIGH TENSION COIL	W	WHITE	LB	LIGHT BLUE
3	R.F. TURN SIG. LIGHT	12	BATT.	21	MAGNETO	G/Y	GREEN/YELLOW	LG	" GREEN
4	L.F. " " "	13	FUSE (10 A)	22	QUICK DISCONNECT	G	GRAY		
5	RIGHT TURN SIG. IND. LIGHT	14	RECTIFIER	23	" "	V	VIOLET		
6	LEFT " " " "	15	MAIN ING. SWITCH			R/W	RED/WHITE		
7	SPEEDO LIGHT	16	HORN	BL	BLACK	GRE	GREEN		
8	TAIL LIGHT	17	FLASHER UNIT	R	RED	Y	YELLOW		
9	HEAD L, HORN + TURN SIG. SW.	18	F. BRAKE LIGHT SW.	B	BLUE	G/W	GREEN/WHITE		

SWITCH CODE

	⏚	R	GRE	G/Y	V	BR	R/W	G	BL	W
OFF	o	o	o							
1	o		o	o	o					
2	o		o	o		o	o	o	o	o
3	o	o	o				o	o		

www.indiandirtbikeparts.com