WIRING DIAGRAM FOR ME-125 WITH ½ WAVE ELECTRICAL SYSTEM

SVB-159

3 JUNE, 74

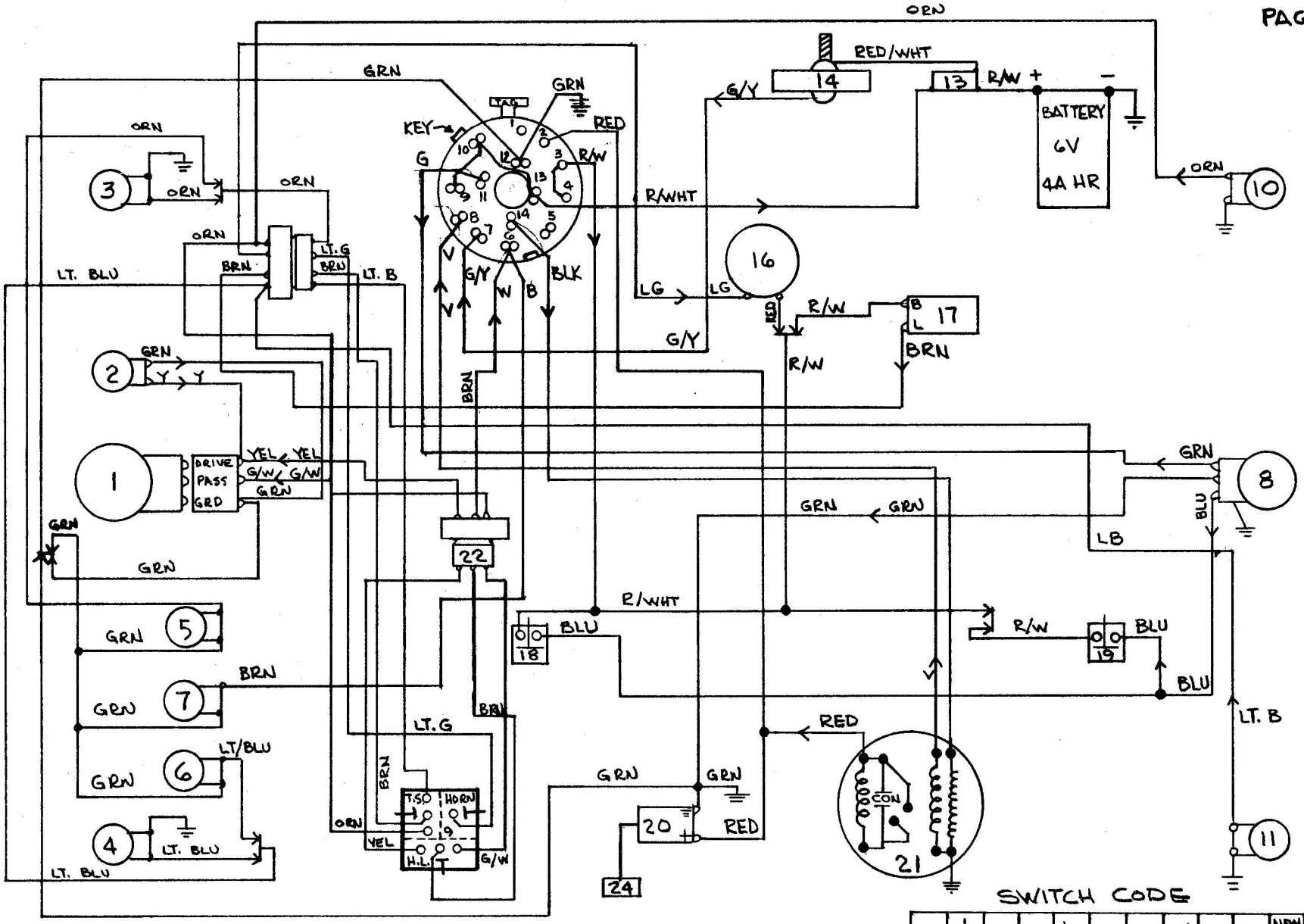

1	HEADLIGHT	10	R.R. TURN SIG. LIGHT	19	R. BRAKE LIGHT SWITCH	BRN	BROWN	OR	ORANGE
2	HIGH BEAM IND. LIGHT	11	L.R. TURN SIG LIGHT	20	HIGH TENSION COIL	WHT	WHT	LT.B	LT. BLUE
3	R.F. TURN SIG. LIGHT	12	BATTERY	21	MAGNETO	G/Y	GREEN/YELLOW	LT.G	LT. GREEN
4	L.F. TURN SIG. LIGHT	13	FUSE (10 AMP)	22	QUICK DISCONNECT	GR	GRAY		
5	RIGHT TURN SIG IND LIGHT	14	RECTIFIER	23	QUICK DISCONNECT	VIO	VIOLET		
6	LEFT TURN SIG IND LIGHT	15	MAIN ING. SWITCH	24	SPARK PLUG	R/W	RED/WHITE		
7	SPEEDO LIGHT	16	HORN	BLK	BLACK	GRN	GREEN		
8	TAIL LIGHT	17	FLASHER UNIT	RED	RED	YEL	YELLOW		
9	HD. LT. HORN-TURN SIG. SW.	18	F. BRAKE LT. SWITCH	BLU	BLUE	G/W	GREEN/WHITE		

SWITCH CODE

	⏚	R	GRN	G/Y	V	BL	W	BR	R/W	NON WIRE	G
OFF	○	○	○				○	○			
1	○		○	○	○		○	○	○	○	
2	○		○	○		○	○	○	○	○	○
3	○	○	○				○	○		○	○

www.indiandirtbikeparts.com