ME-125 1/2 Wave Elec. Wiring Schematic

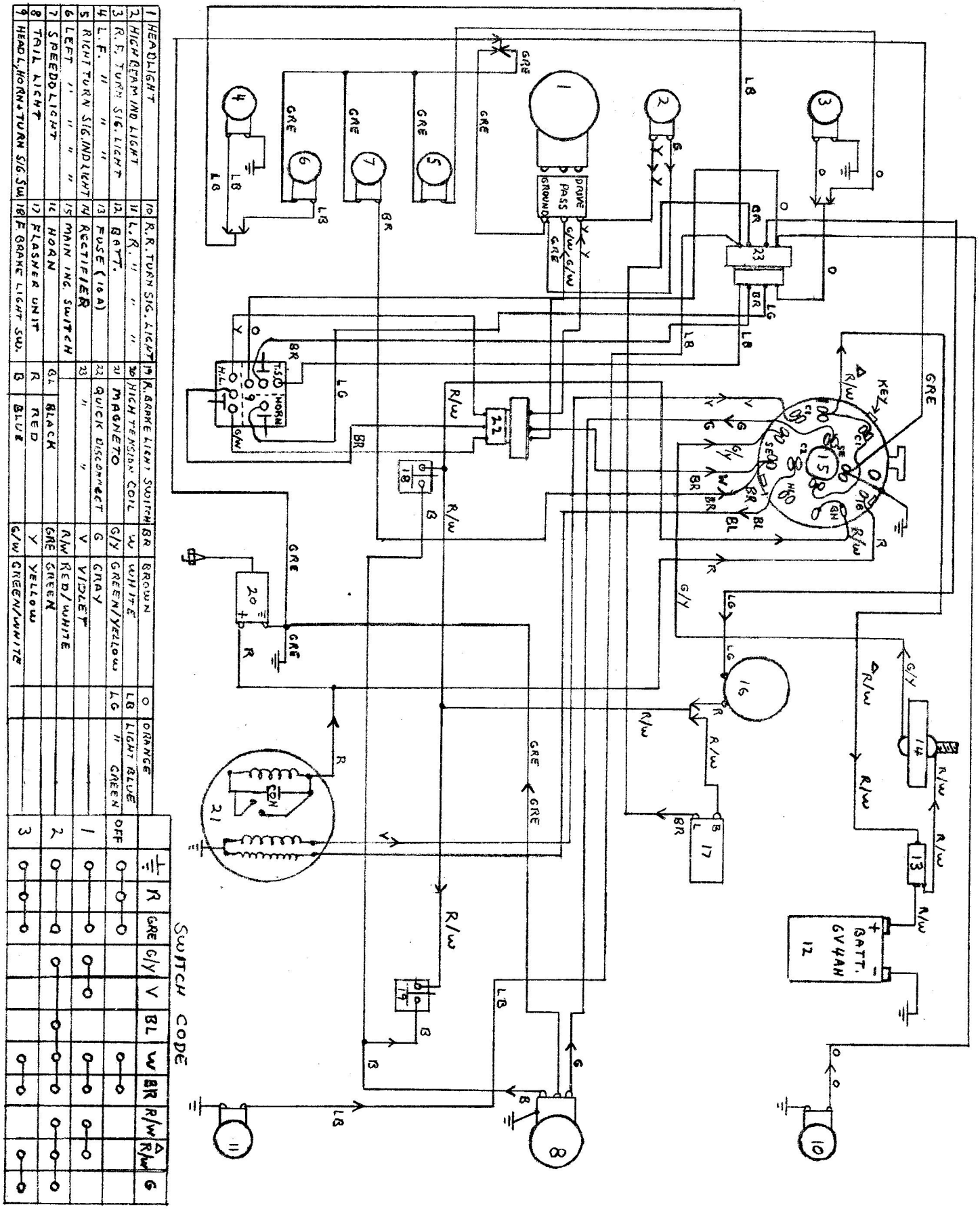

www.indiandirtbikeparts.com